LEICA **SUMMARIT-S** 70 mm ASPH. f/2.5 / CS

Technical Data.

Illustration 1:2

TECHNICAL DATA

Order no.	11055 (CS: 11051)
Image angle (diagonal, horizontal, vertical)	approx. 42° / 35° / 24°, corresponds to approx. 56 mm focal length in 35 mm format
Optical design Number of lenses / groups	8 / 6
Entrance pupil	infinity: 26.66 mm (in front of bayonet in incident light direction), close focus limit: 43.62 mm (in front of bayonet in incident light direction)
Focusing range	0,5 m to ∞
Distance setting Scales	Combined meter/feet graduation
Smallest object field	142 mm × 212 mm
Largest reproduction ratio	1 : 4,7
Aperture Setting / Function	Electronically controlled diaphragm, set using setting/ selection dial on camera, including half values
Lowest value	22
Bayonet	Leica S bayonet
Filter mount / Lens hood	External bayonet for lens hood (included), internal thread for E72 filter, filter mount does not rotate
Dimensions and weight Length to bayonet mount	approx. 93 / 151 mm (without / with lens hood)
Largest diameter	approx. 90 / 117 mm (without / with lens hood)
Weight	approx. 740 / 890 g (without / with central shutter)

Leica Camera AG / Oskar-Barnack-Strasse 11 / 35606 SOLMS / GERMANY / Phone +49(0)6442-208-0 I Fax +49(0)6442-208-333 / www.leica-camera.com

LEICA **SUMMARIT-S** 70 mm ASPH. f/2.5 / CS

ENGINEERING DRAWING

Illustration 1:2

LENS SHAPE

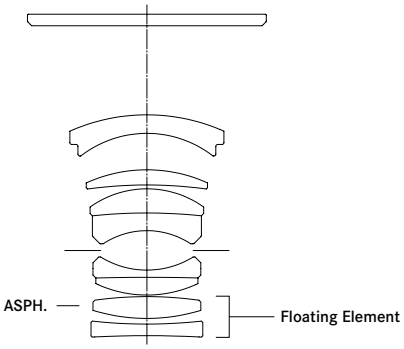

The Summarit-S 70 mm f/2.5 ASPH. plays the role of the standard lens in the Leica S-System lens-portfolio, and has a focal length corresponding to 56 mm in 35 mm format. In order to ensure its universal versatility, the Leica design engineers invested immense effort to guarantee superior image performance at maximum aperture and at all focusing distances.

One of the eight lenses arranged in six groups features an aspherical surface, to minimise aberration effects. The two cemented elements are manufactured from glass with high anomalous partial dispersion, minimising the effect of chromatic aberrations. In addition, glasses with very high refractive indices work together with the aspherical element to almost completely eliminate monochromatic aberration effects. In order to achieve perfect image performance from infinity to its minimum focusing distance of just 50 cm (~1.6 ft), the last two lenses are constructed as a floating element that moves independently from the rest of the optical system when focusing. The Leica Summarit-S 70 mm f/2.5 ASPH. is ideally protected against water droplets and dust and features a protective neutral glass filter that is included as a parameter in its optical design.

The reward for the immense effort invested in its design and construction is a lens with extraordinarily good contrast performance wide open and at all other apertures that, even at its closest focusing distances, can be only marginally improved in the extreme corners of images by stopping down. With a value of only 1.2 %, distortion remains imperceptible, and maximum vignetting of 1.4 stops at maximum aperture is so extremely low, ensuring that the Leica Summarit-S 70 mm f/2.5 ASPH. delivers consistently dependable and superior image performance at all apertures and distances.

Leica Camera AG / Oskar-Barnack-Strasse 11 / 35606 SOLMS / GERMANY / Phone +49(0)6442-208-0 I Fax +49(0)6442-208-333 / www.leica-camera.com

LEICA **SUMMARIT-S** 70 mm ASPH. f/2.5 / CS

Lens with lens hood, illustration 1:2

Lens hood in transport position, illustration 1:2

SCOPE OF DELIVERY

	Lens cover S E82 (Order no. 16019), Rear lens cover S (Order no. 16020), Lens pouch (Order no. 439-606.100-000), Lens hood (Order no. 12401)

Leica Camera AG / Oskar-Barnack-Strasse 11 / 35606 SOLMS / GERMANY / Phone +49(0)6442-208-0 I Fax +49(0)6442-208-333 / www.leica-camera.com

LEICA **SUMMARIT-S** 70 mm ASPH. f/2.5 / CS

MTF DIAGRAMS

Focusing distance

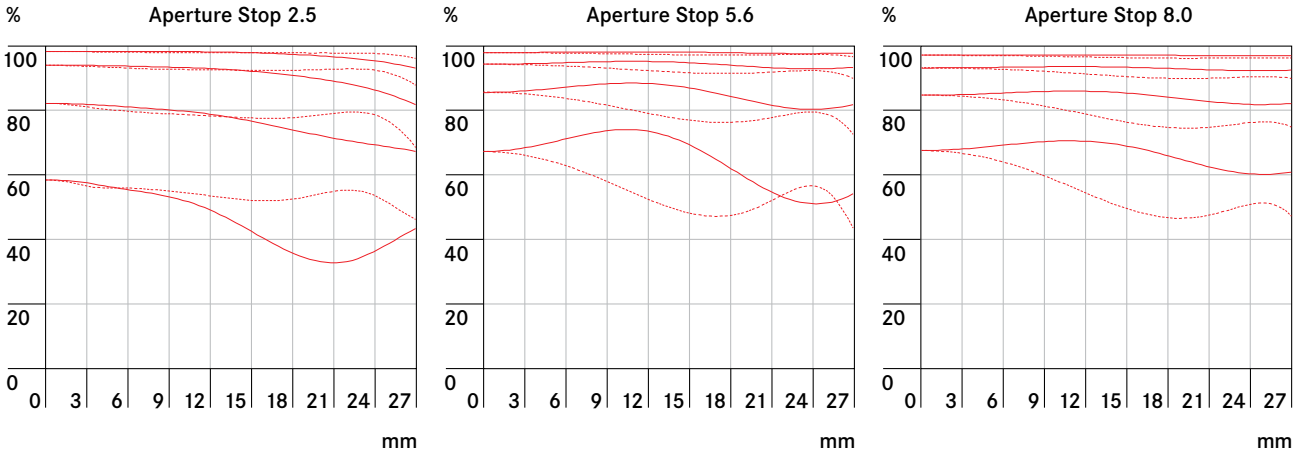

Infinity (∞)

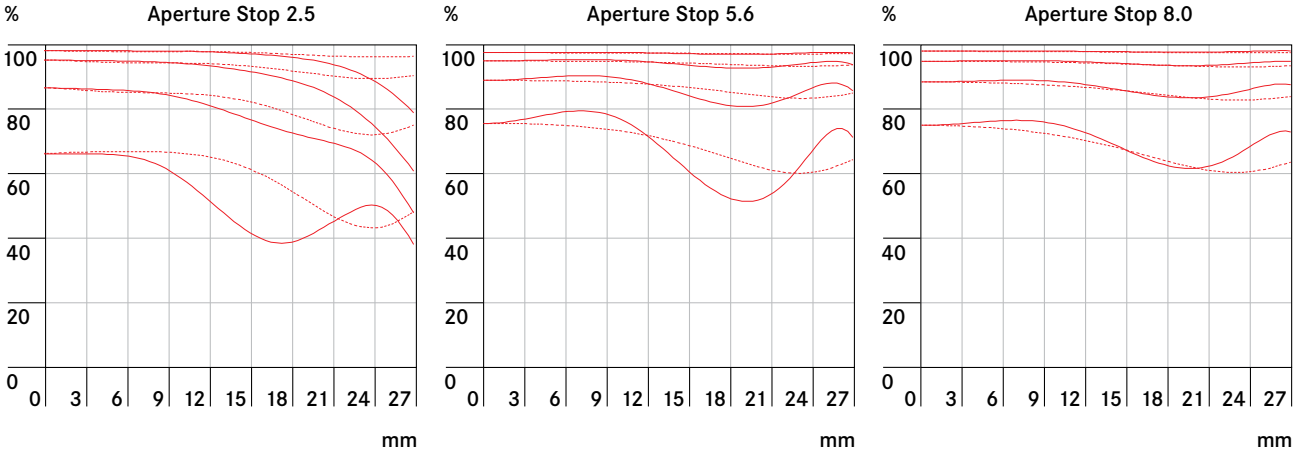

Sagittal structures

Tangential structures

MTF GRAPHS

The MTF is indicated both at full aperture and at f/5.6 and f/8 at long taking distances (infinity). Shown is the contrast in percentage for 5, 10, 20 and 40 lp/mm across the height of the 35 mm film format, for tangential (dotted line) and sagittal (solid line) structures, in white light. The 5 and 10 lp/mm will give an indication regarding the contrast ratio for large object structures. The 20 and 40 lp/mm records the resolution of finer and finest object structures.

Leica Camera AG / Oskar-Barnack-Strasse 11 / 35606 SOLMS / GERMANY / Phone +49(0)6442-208-0 I Fax +49(0)6442-208-333 / www.leica-camera.com

LEICA **SUMMARIT-S** 70 mm ASPH. f/2.5 / CS

VIGNETTING-/DISTORTION DIAGRAM

Focusing distance

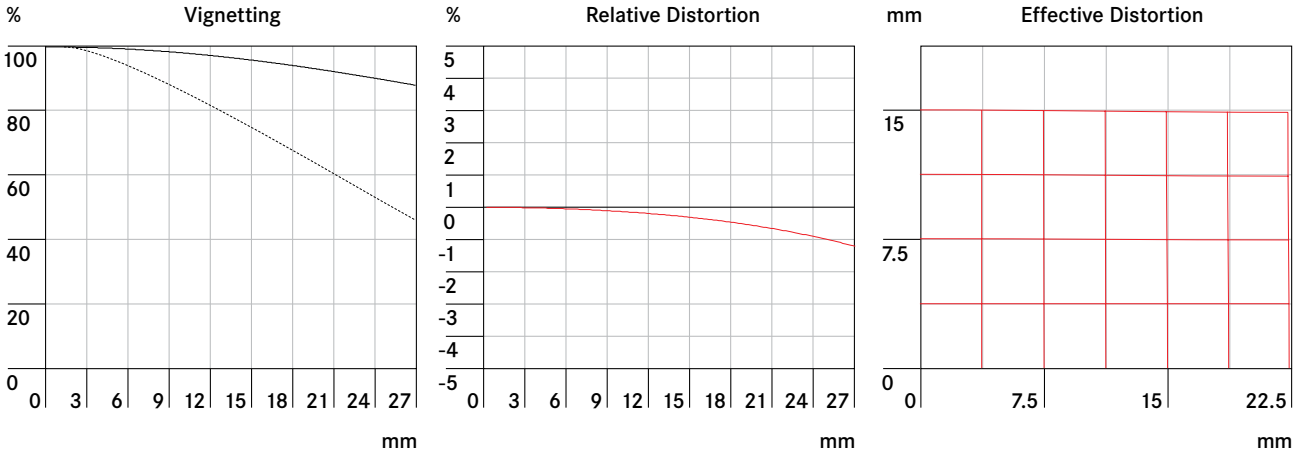

Infinity (∞)

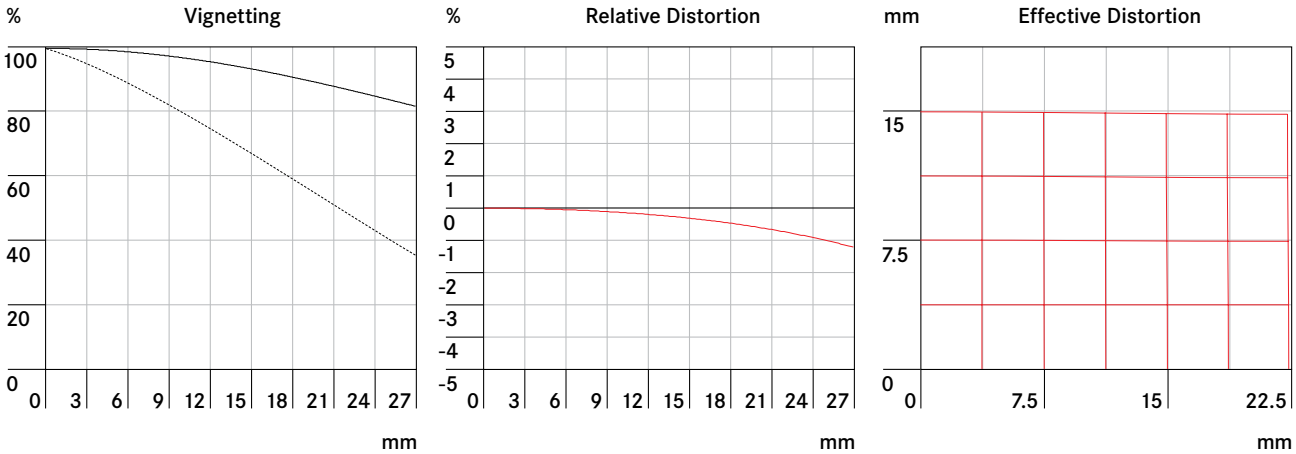

2.5

8.0, 5.6

DISTORTION & VIGNETTING

Distortion is the deviation of the real image height (in the picture) from the ideal image height. The relative distortion is the percentage deviation. The ideal image height results from the object height and the magnification. The image height of 27.04 mm is the radial distance between the edge and the middle of the image field for the format 30 mm × 45 mm. The graph of the effective distortion illustrates the appearance of straight horizontal and vertical lines in the picture.

Vignetting is a continous decrease of the illumination to the edges of the image field. The graph shows the percentage loss of illumination over the image height. 100 % means no vignetting.

Leica Camera AG / Oskar-Barnack-Strasse 11 / 35606 SOLMS / GERMANY / Phone +49(0)6442-208-0 I Fax +49(0)6442-208-333 / www.leica-camera.com

LEICA **SUMMARIT-S** 70 mm ASPH. f/2.5 / CS

DEPTH OF FIELD TABLE

∞ feet ∞ m	Aperture Stop								Magnifi-cation
	2,5	2,8	4	5,6	8	11	16	22	
0,5	0,497 – 0,503	0,497 – 0,503	0,496 – 0,504	0,494 – 0,506	0,492 – 0,509	0,489 – 0,512	0,484 – 0,518	0,478 – 0,525	1/4,73
0,6	0,596 – 0,604	0,595 – 0,605	0,593 – 0,607	0,591 – 0,610	0,587 – 0,614	0,582 – 0,619	0,574 – 0,629	0,565 – 0,640	1/6,2
0,7	0,694 – 0,706	0,693 – 0,707	0,690 – 0,710	0,687 – 0,714	0,681 – 0,720	0,674 – 0,728	0,663 – 0,742	0,651 – 0,759	1/7,65
0,8	0,791 – 0,809	0,791 – 0,809	0,787 – 0,814	0,782 – 0,819	0,774 – 0,828	0,765 – 0,839	0,750 – 0,858	0,734 – 0,882	1/9,09
1	0,986 – 1,015	0,985 – 1,016	0,978 – 1,023	0,970 – 1,032	0,958 – 1,046	0,943 – 1,065	0,919 – 1,098	0,893 – 1,14	1/12
1,5	1,47 – 1,54	1,46 – 1,54	1,45 – 1,56	1,43 – 1,58	1,40 – 1,62	1,37 – 1,66	1,32 – 1,75	1,26 – 1,87	1/19,1
2	1,94 – 2,07	1,93 – 2,07	1,91 – 2,10	1,87 – 2,15	1,82 – 2,22	1,765 – 2,31	1,68 – 2,49	1,58 – 2,74	1/26,2
3	2,86 – 3,16	2,85 – 3,17	2,79 – 3,25	2,72 – 3,36	2,61 – 3,54	2,49 – 3,79	2,31 – 4,31	2,13 – 5,17	1/40,4
5	4,62 – 5,46	4,59 – 5,50	4,43 – 5,74	4,24 – 6,10	3,98 – 6,74	3,70 – 7,76	3,31 – 10,4	2,94 – 17,5	1/68,8
∞	58,0 – ∞	53,8 – ∞	37,7 – ∞	27,0 – ∞	18,9 – ∞	13,8 – ∞	9,49 – ∞	6,93 – ∞	1/∞

Set distance [m]

Leica Camera AG / Oskar-Barnack-Strasse 11 / 35606 SOLMS / GERMANY / Phone +49(0)6442-208-0 I Fax +49(0)6442-208-333 / www.leica-camera.com